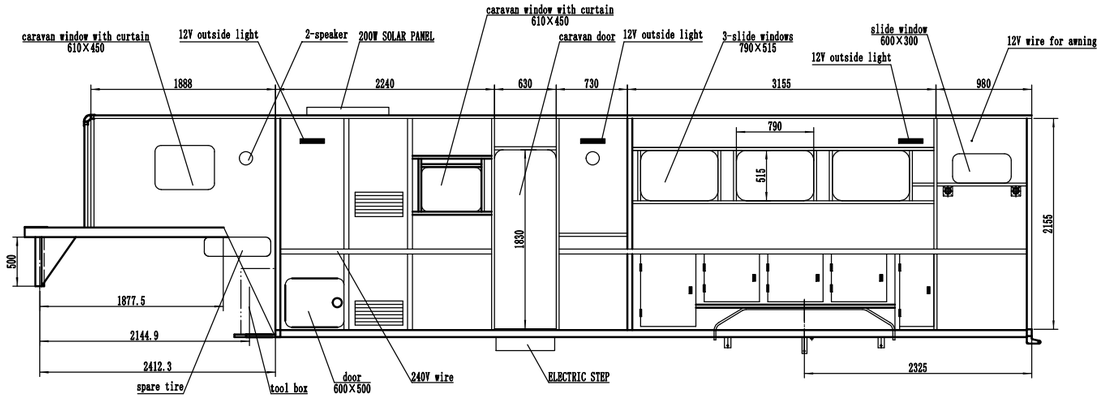

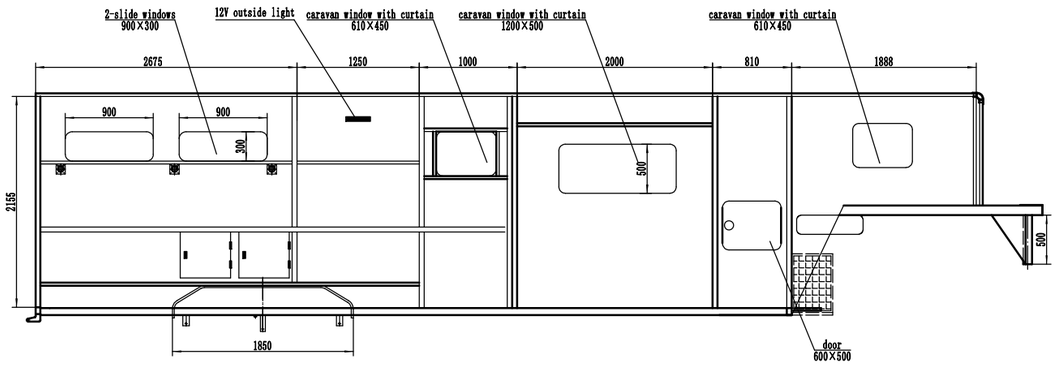

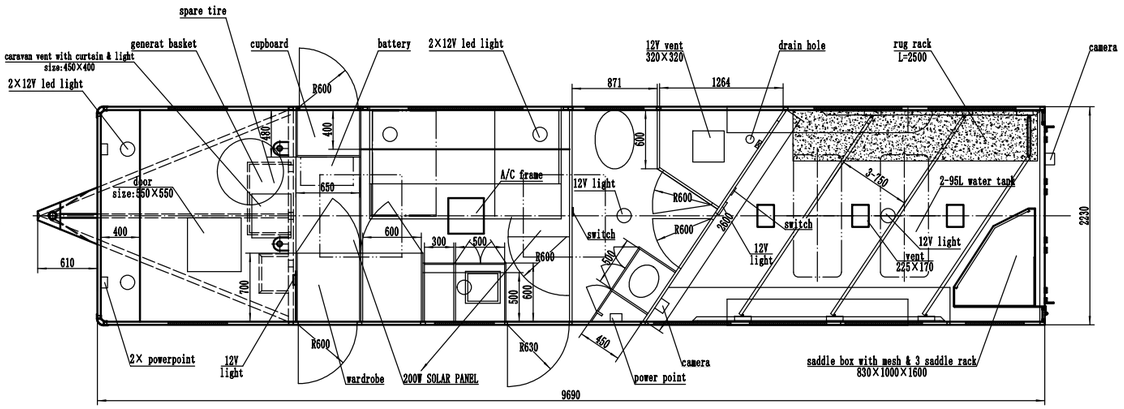

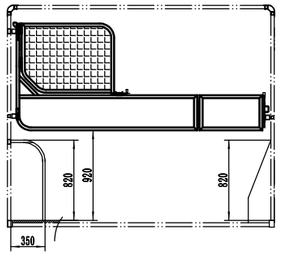

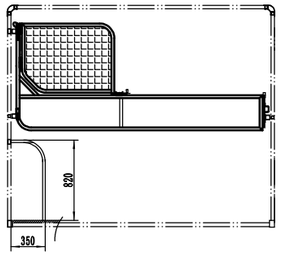

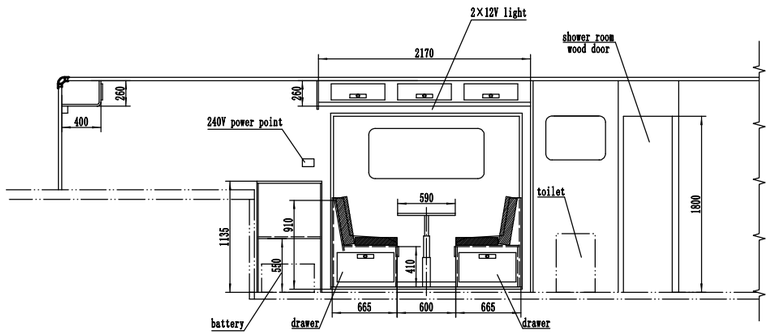

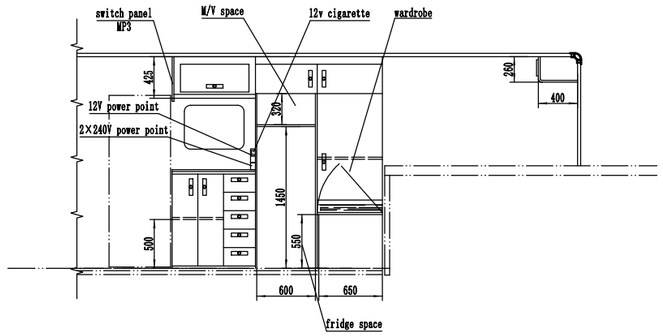

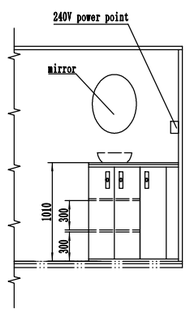

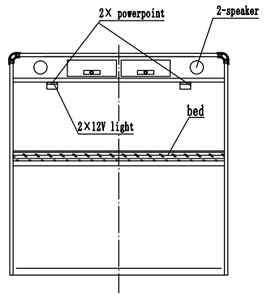

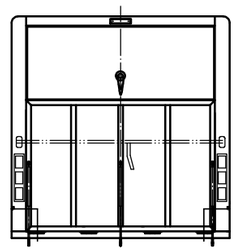

标记	处数	更改文件名	签字	日期	LAYOUT	HORSSEN TRAILER
						JHT.3HAL-GNS.6171
设计		WFG			Q235A	图样标记 / 重量 / 比例 1:30
			日期	2026.5.12		共 张 / 第 张

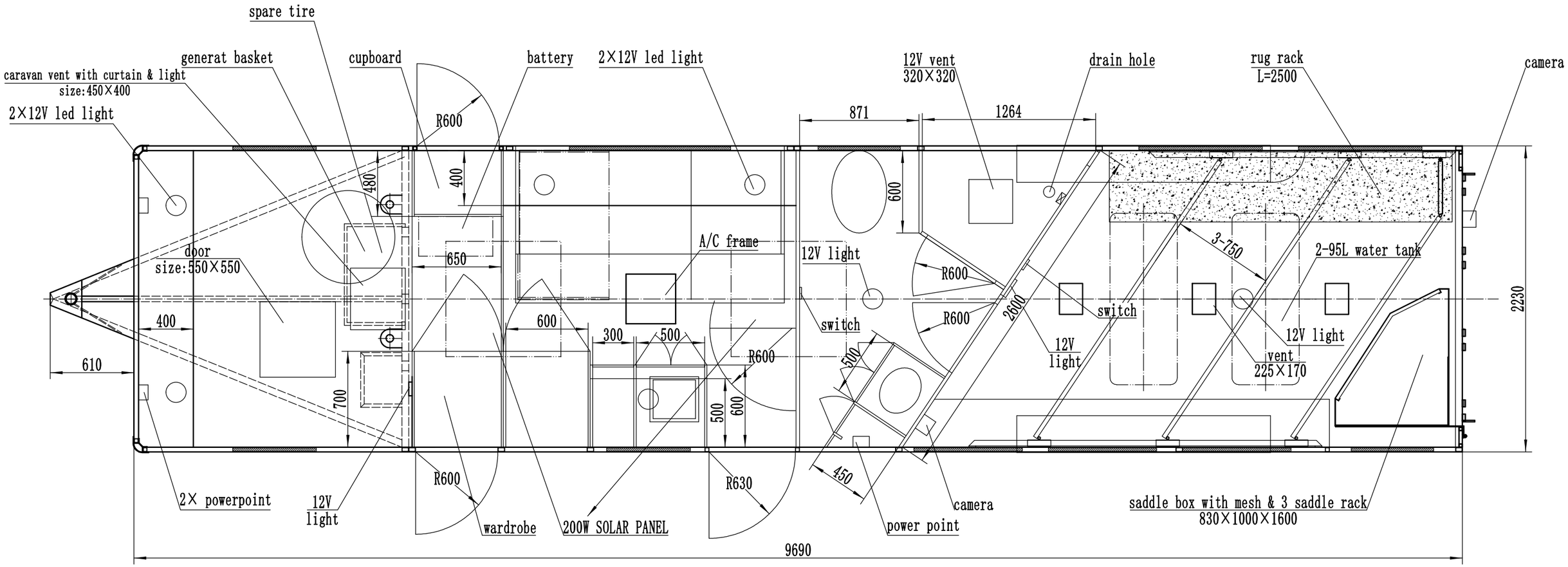
spare tire
generat basket
cupboard
battery
2×12V led light
12V vent
320×320
drain hole
rug rack
L=2500
camera
caravan vent with curtain & light
size:450×400
2×12V led light
R600
871
1264
480
400
600
A/C frame
12V light
3-750
2-95L water tank
door
size:550×550
650
R600
R600
2600
switch
switch
12V light
12V light
vent
225×170
2230
400
600
300
500
R600
500
610
700
500
600
2× powerpoint
12V light
R600
wardrobe
200W SOLAR PANEL
R630
450
power point
camera
saddle box with mesh & 3 saddle rack
830×1000×1600
9690

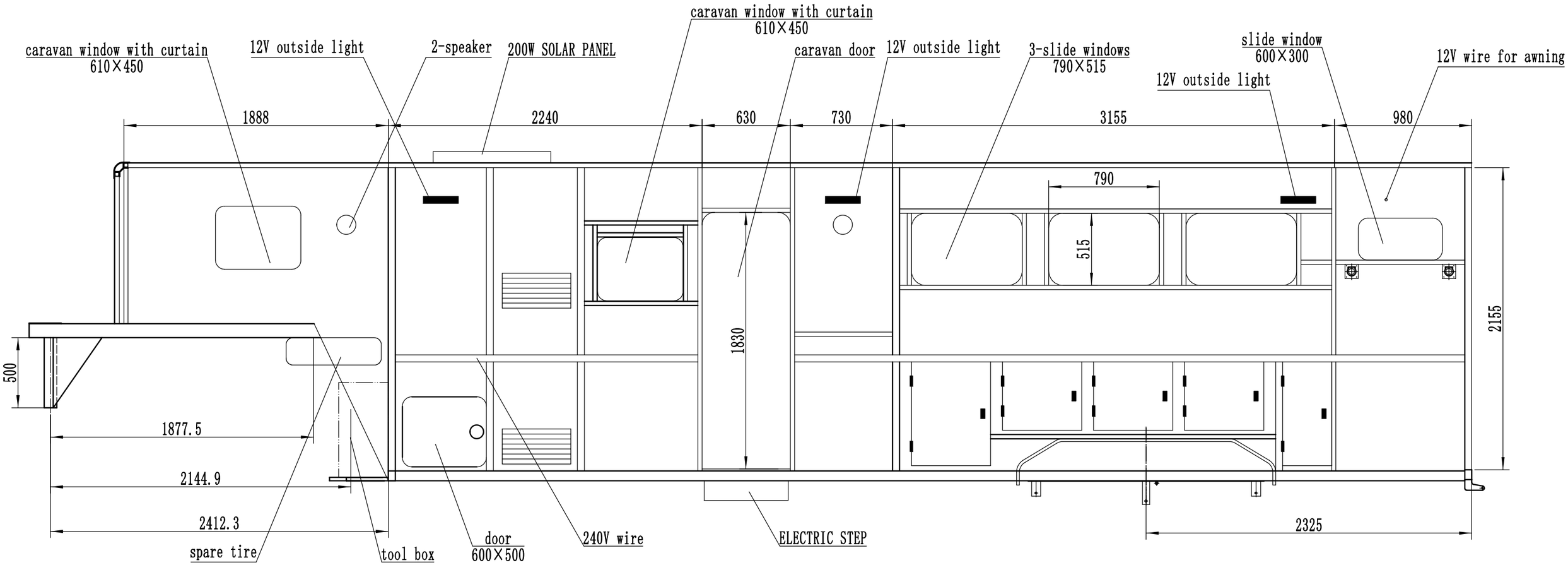
caravan window with curtain
610×450
12V outside light
2-speaker
200W SOLAR PANEL
caravan window with curtain
610×450
caravan door
12V outside light
3-slide windows
790×515
slide window
600×300
12V outside light
12V wire for awning
1888
2240
630
730
3155
980
790
515
1830
2155
500
1877.5
2144.9
2412.3
2325
spare tire
tool box
door
600×500
240V wire
ELECTRIC STEP

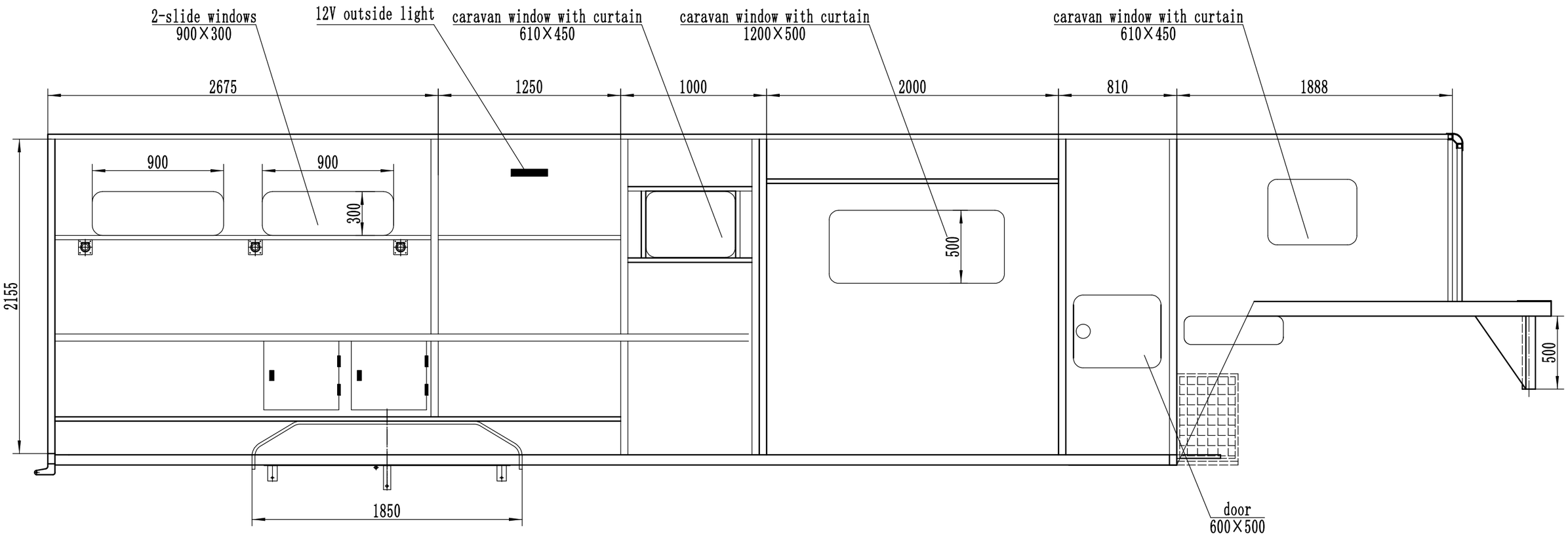
2-slide windows
900×300
12V outside light
caravan window with curtain
610×450
caravan window with curtain
1200×500
caravan window with curtain
610×450
2675
1250
1000
2000
810
1888
900
900
300
500
500
2155
1850
door
600×500

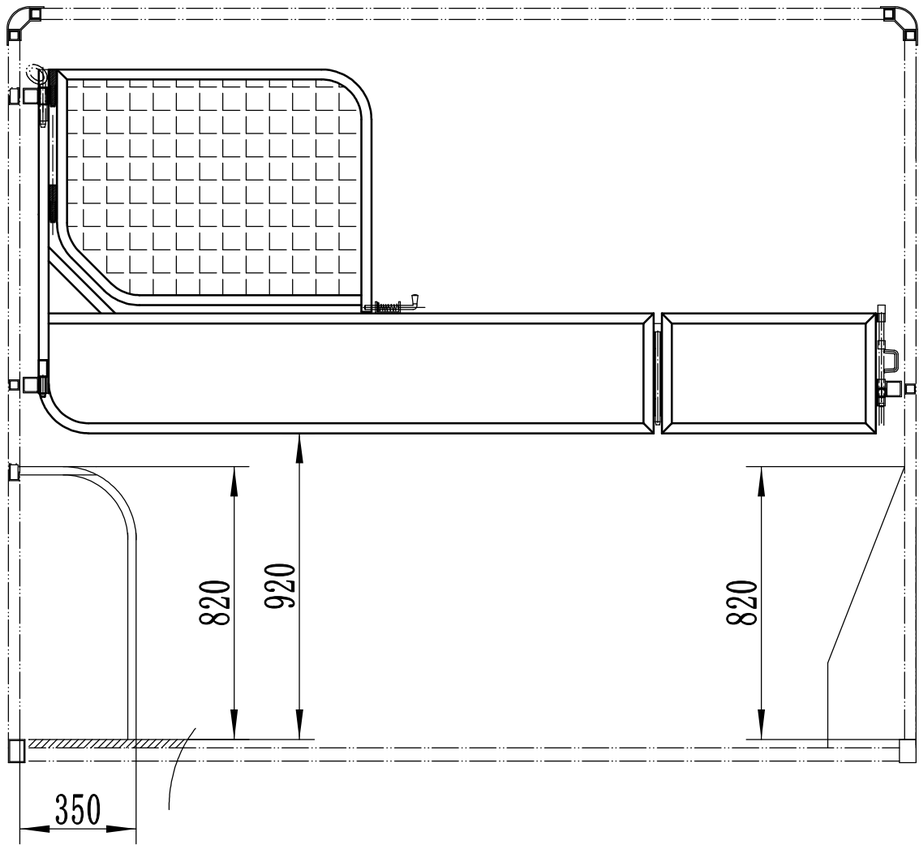
820
920
820
350

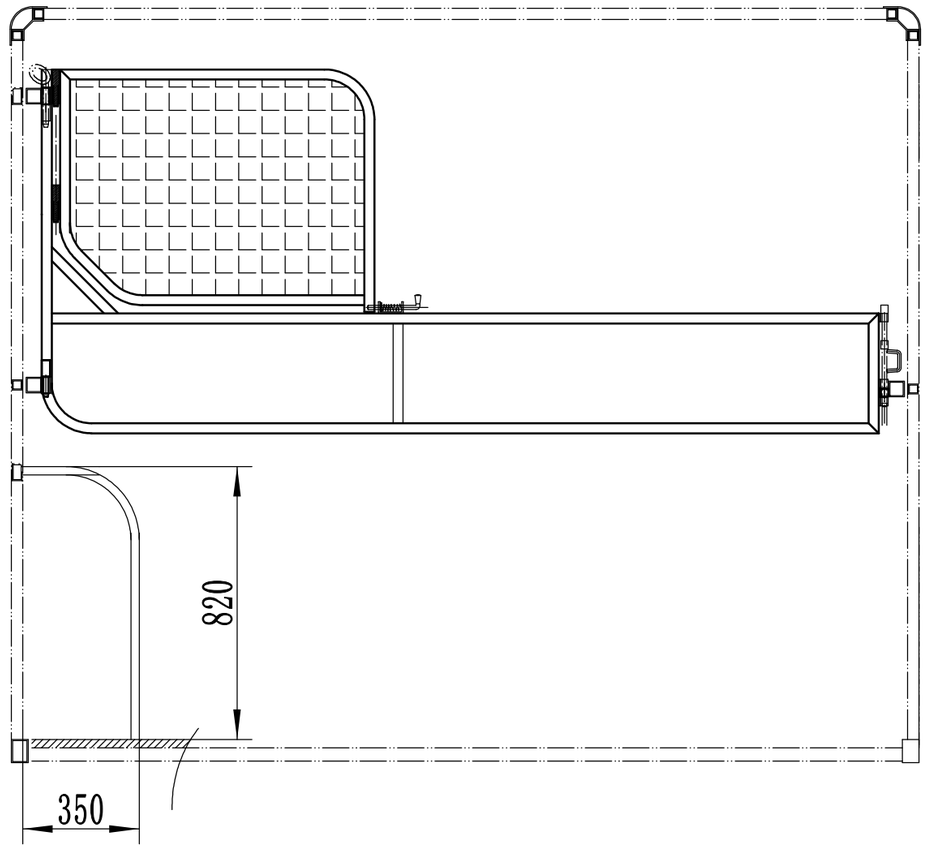
820
350

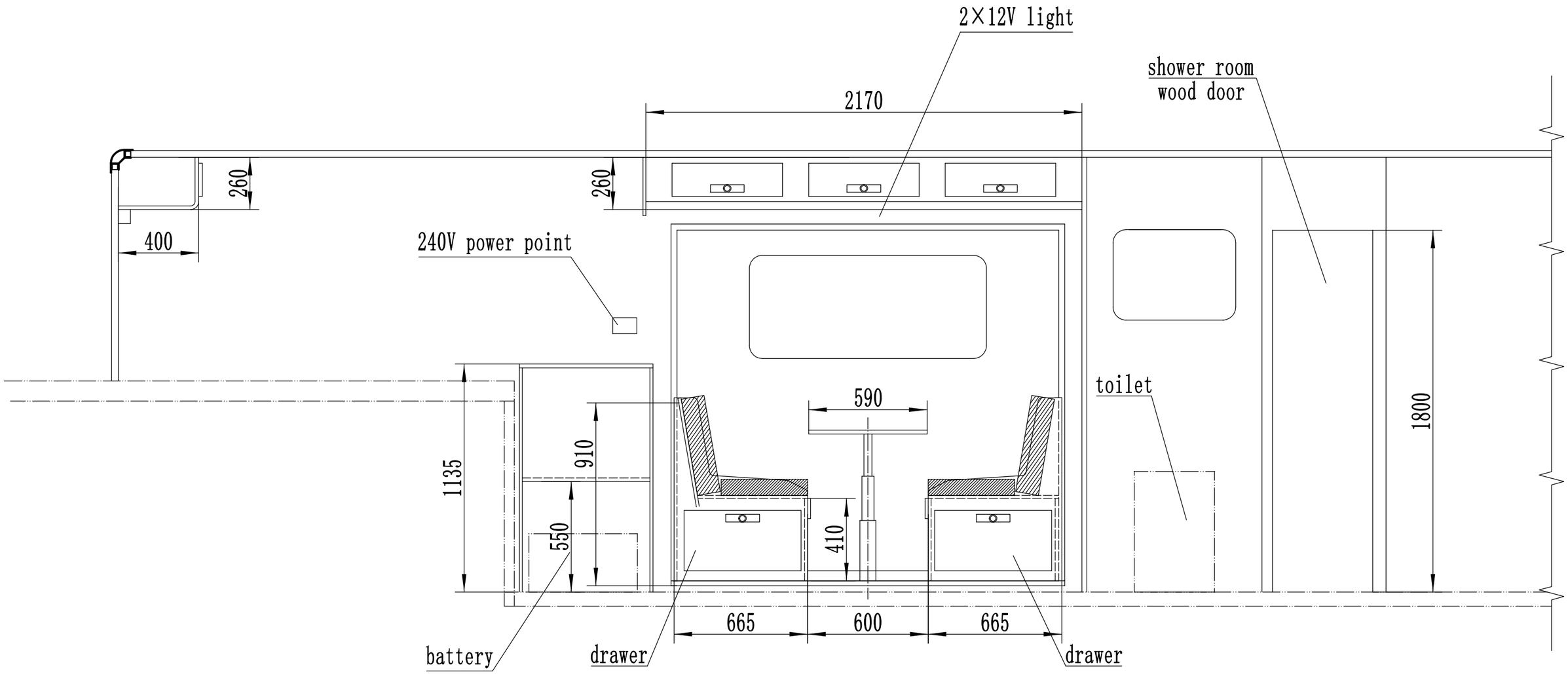
2×12V light
shower room
wood door
2170
260
260
400
240V power point
590
toilet
1800
910
1135
550
410
665
600
665
battery
drawer
drawer

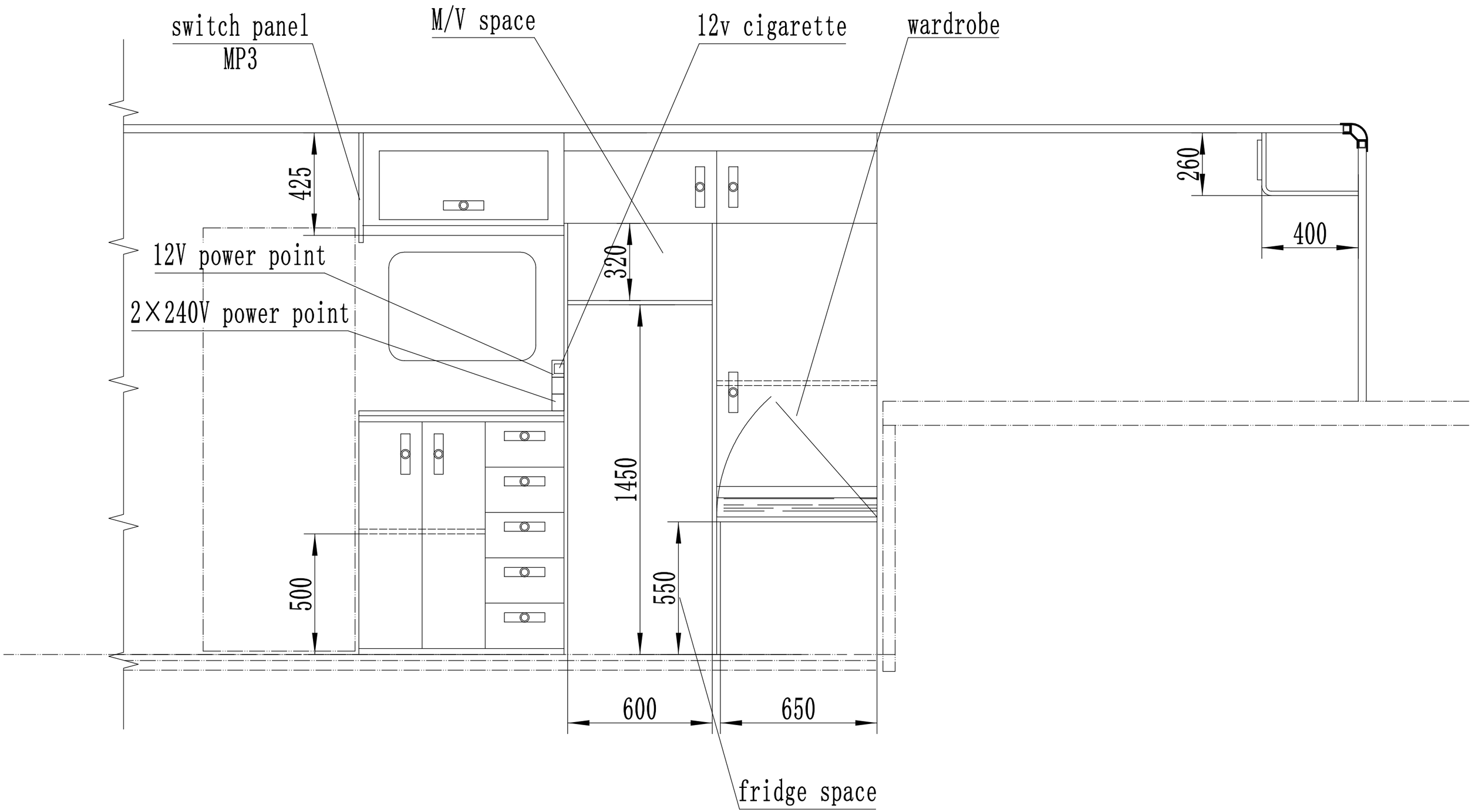
switch panel
MP3
M/V space
12v cigarette
wardrobe
425
260
400
12V power point
2×240V power point
320
1450
500
550
600
650
fridge space

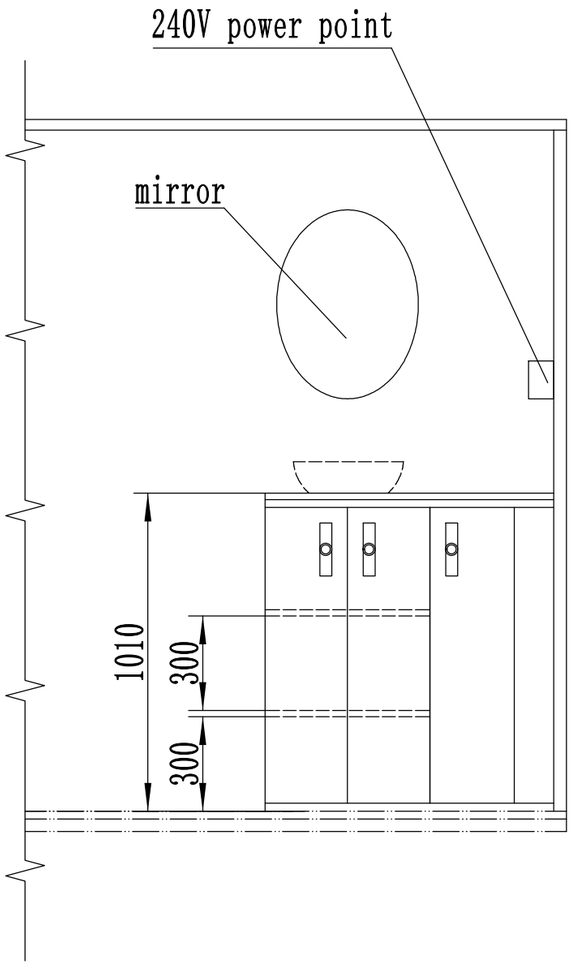
240V power point
mirror
1010
300
300

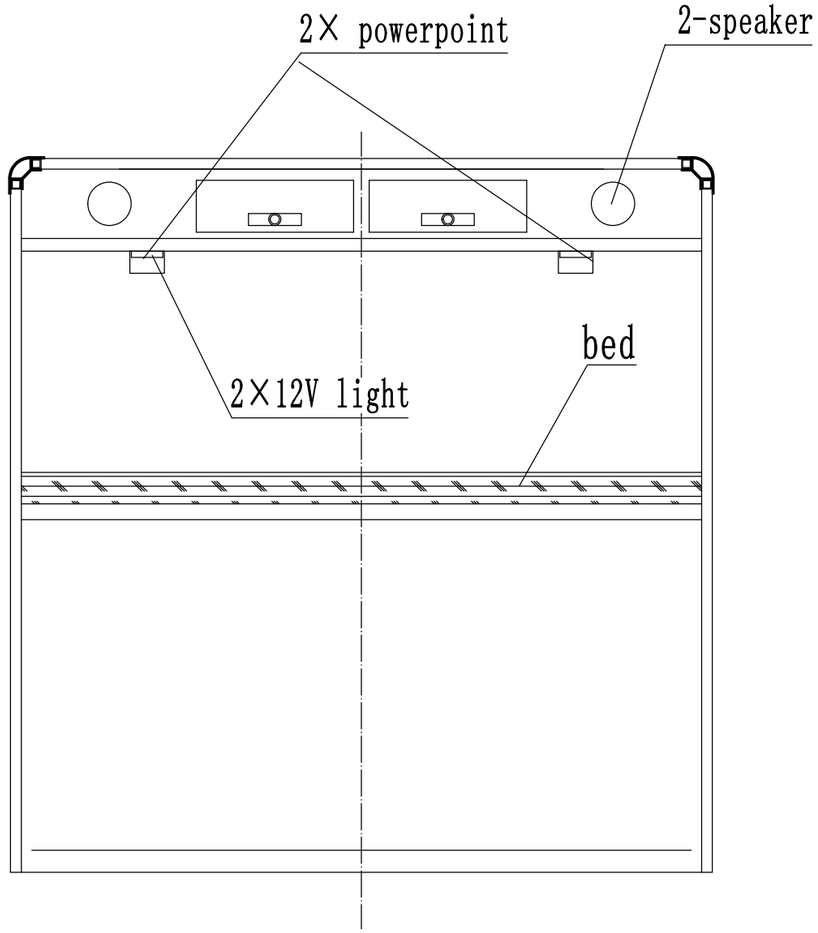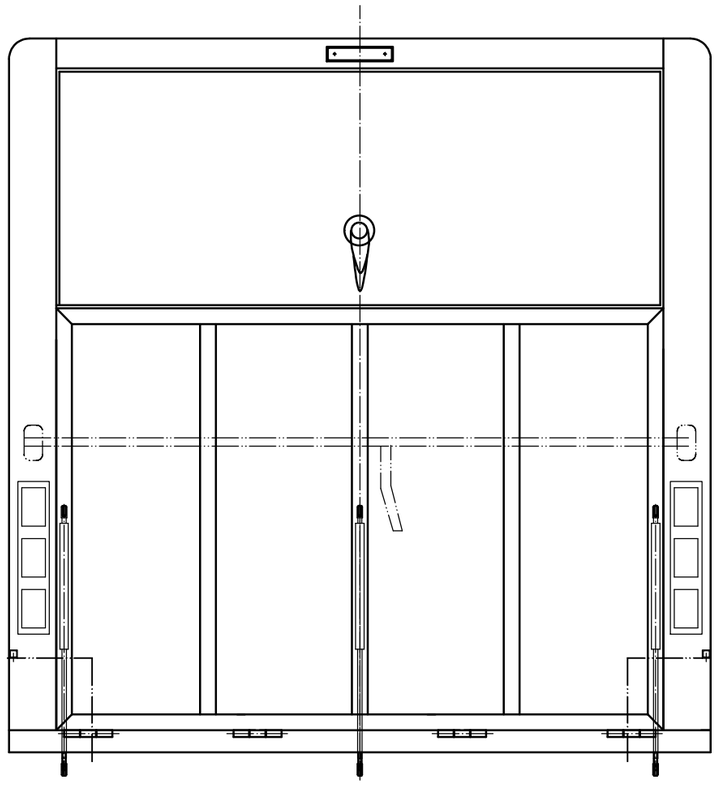
2× powerpoint
2-speaker
bed
2×12V light