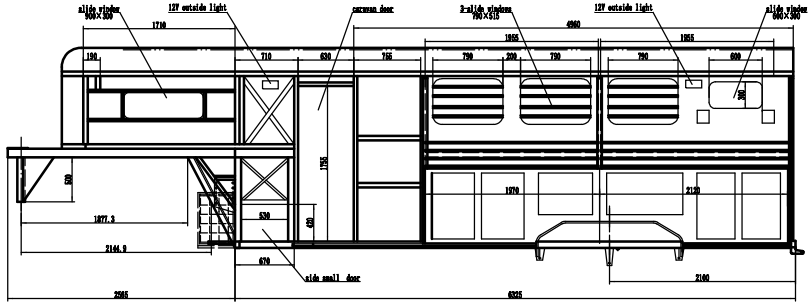

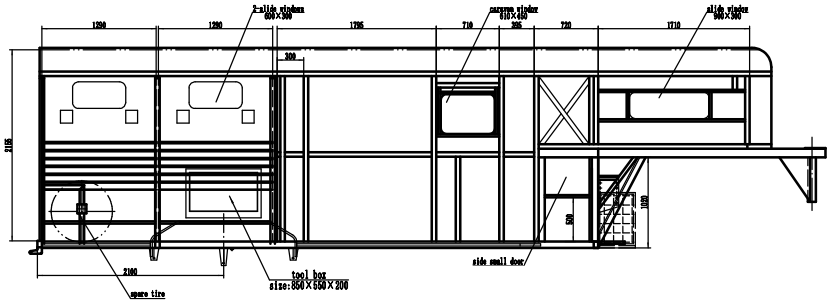

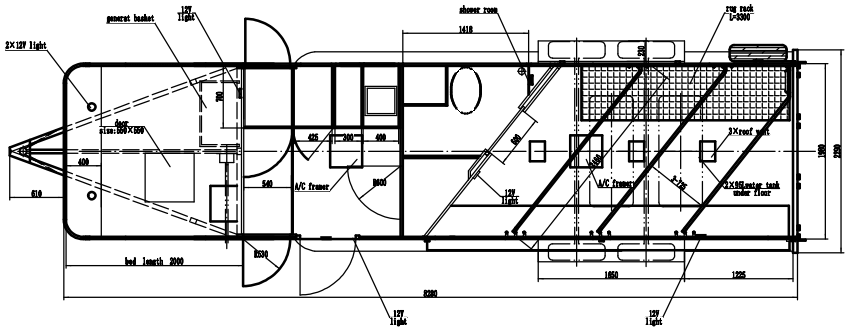

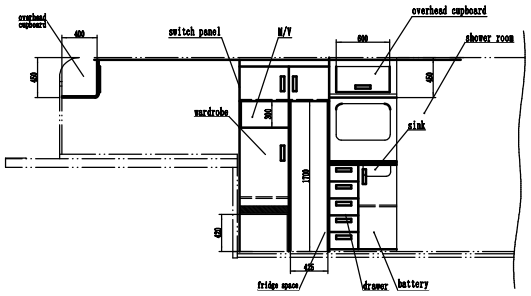

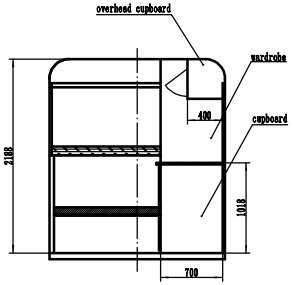

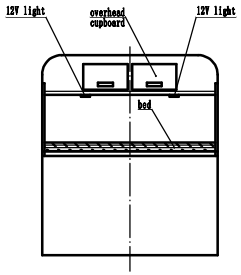

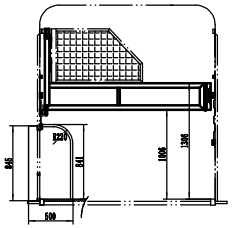

LAYOUT	HORSSEM TRAILER		
Q235A	DWT. 4HAL-GN.4405.01-00		
			1:20

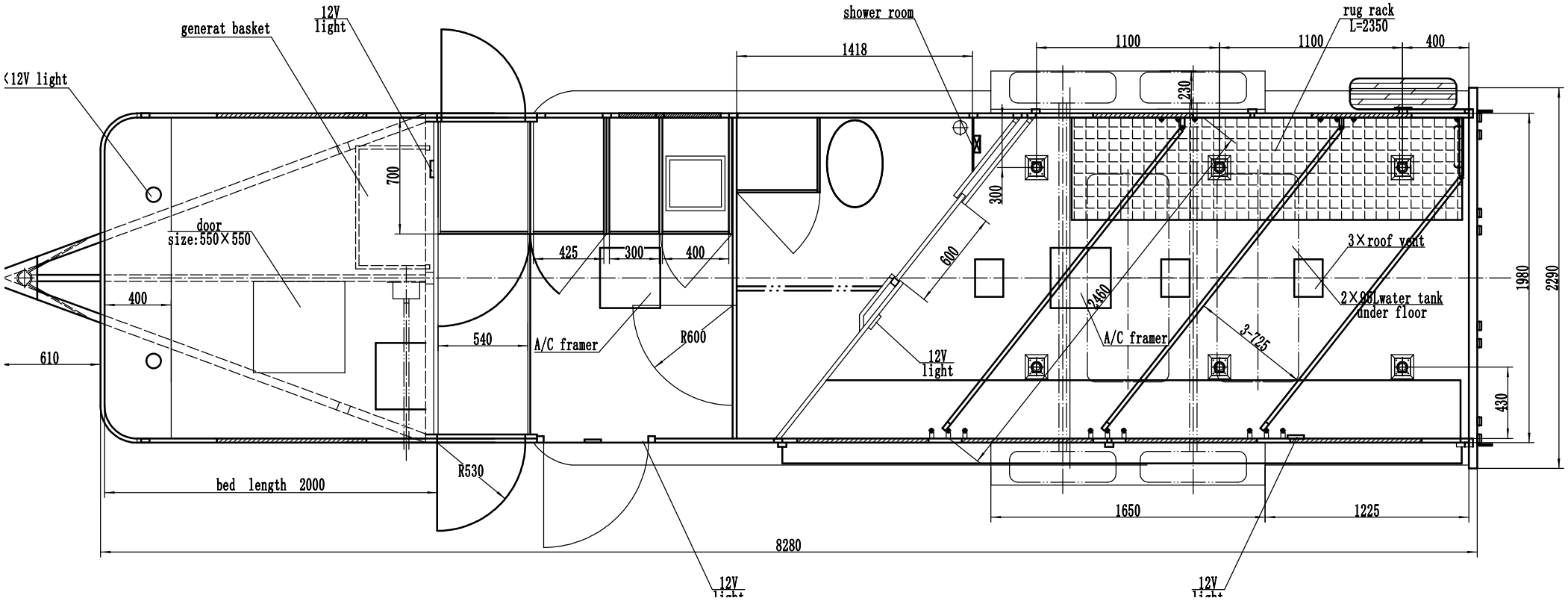
12V light
generat basket
12V light
shower room
rug rack
L=2350
1418
1100
1100
400
230
700
300
600
door
size:550×550
425
300
400
3×roof vent
400
2460
2×88L water tank
under floor
1980
2290
540
A/C framer
R600
A/C framer
3-125
610
12V light
430
R530
bed length 2000
1650
1225
8280
12V light
12V light

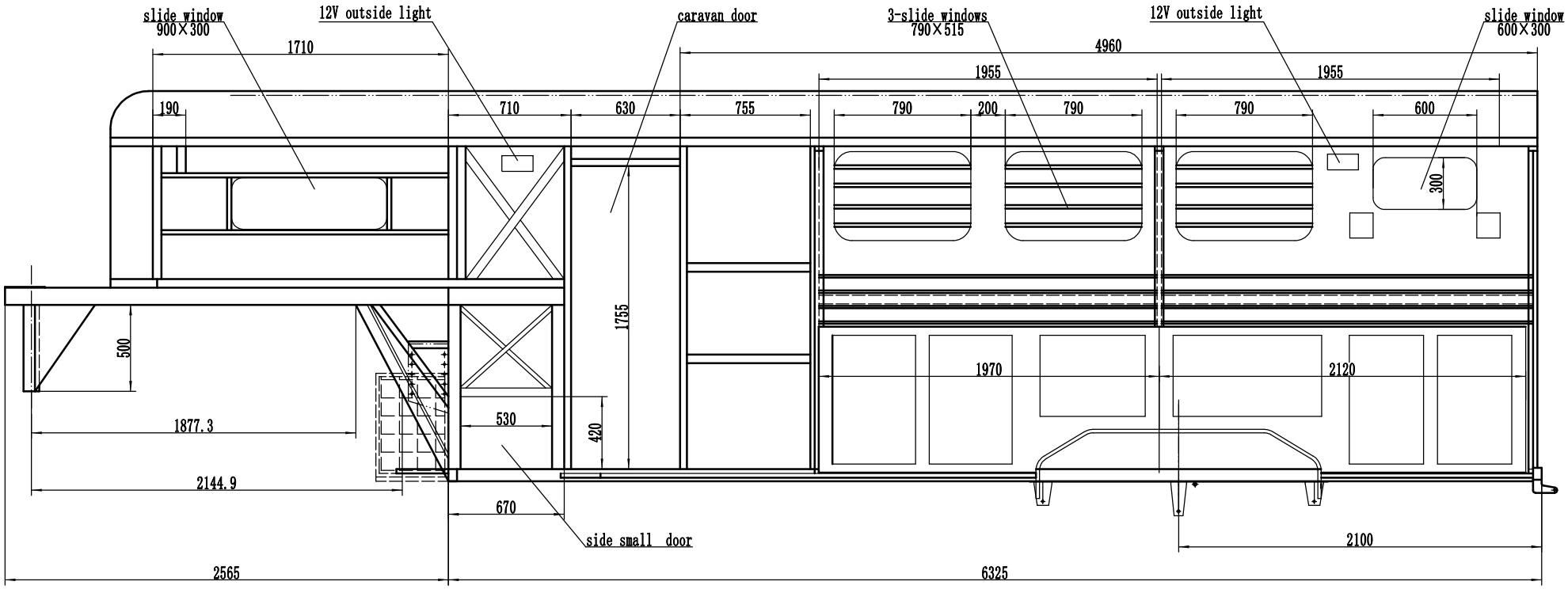
slide window
900×300
12V outside light
caravan door
3-slide windows
790×515
12V outside light
slide window
600×300
1710
4960
1955
1955
190
710
630
755
790
200
790
790
600
300
1755
500
1970
2120
1877.3
530
420
2144.9
670
side small door
2100
2565
6325

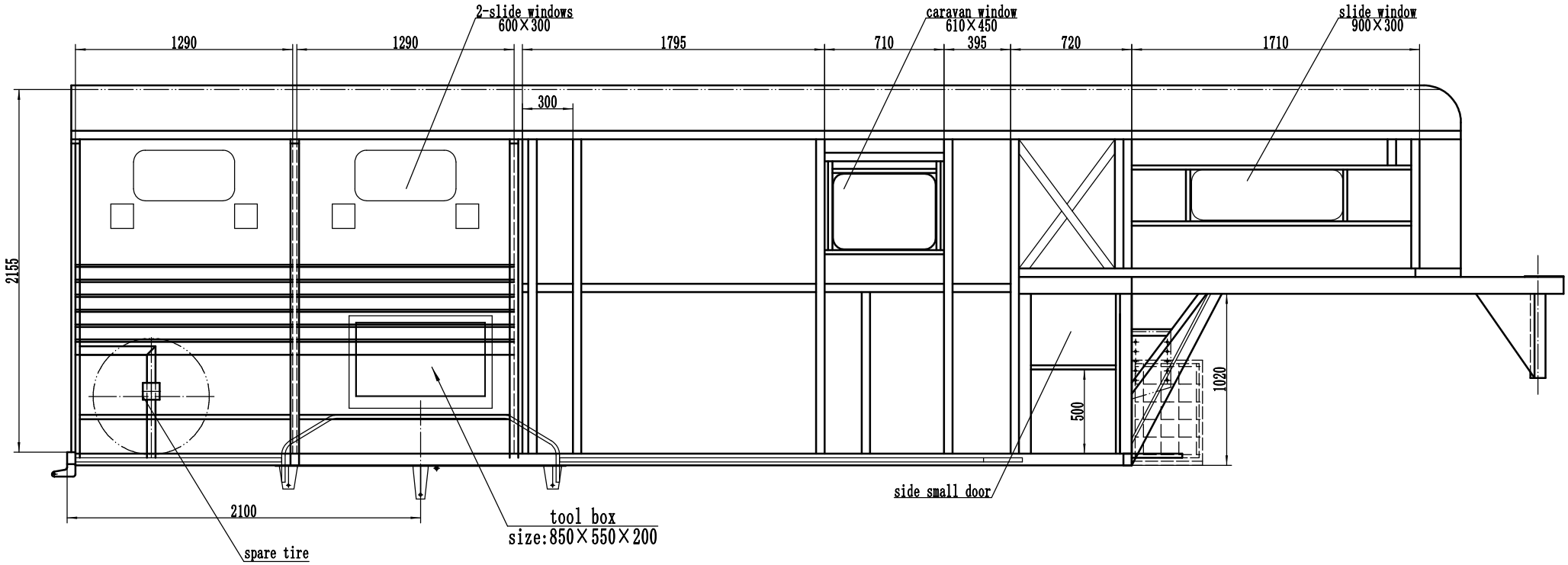
2-slide windows
600×300
caravan window
610×450
slide window
900×300
1290
1290
1795
710
395
720
1710
300
2155
1020
500
2100
side small door
tool box
size:850×550×200
spare tire

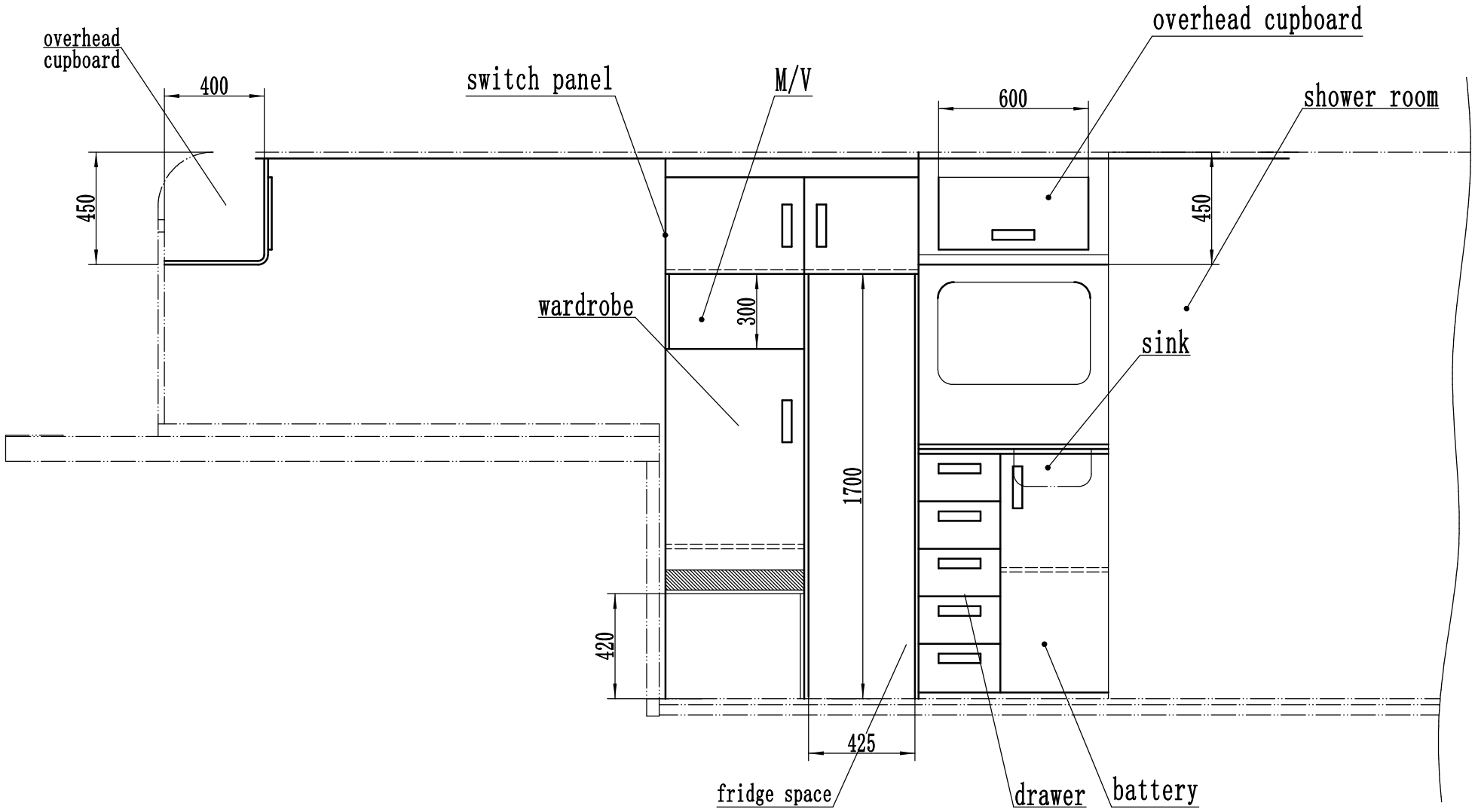
overhead
cupboard
400
450
switch panel
M/V
wardrobe
300
1700
420
425
fridge space
600
overhead cupboard
shower room
450
sink
drawer
battery

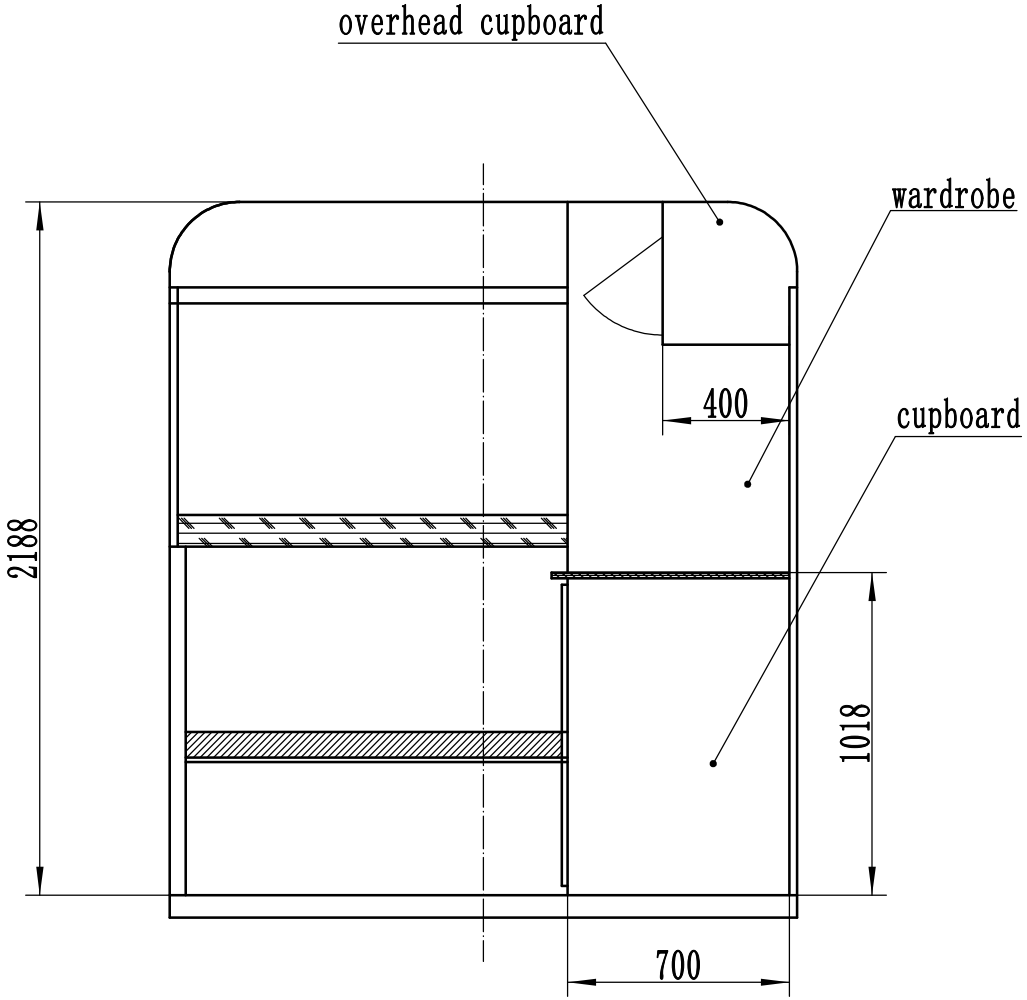
overhead cupboard
wardrobe
400
cupboard
2188
1018
700

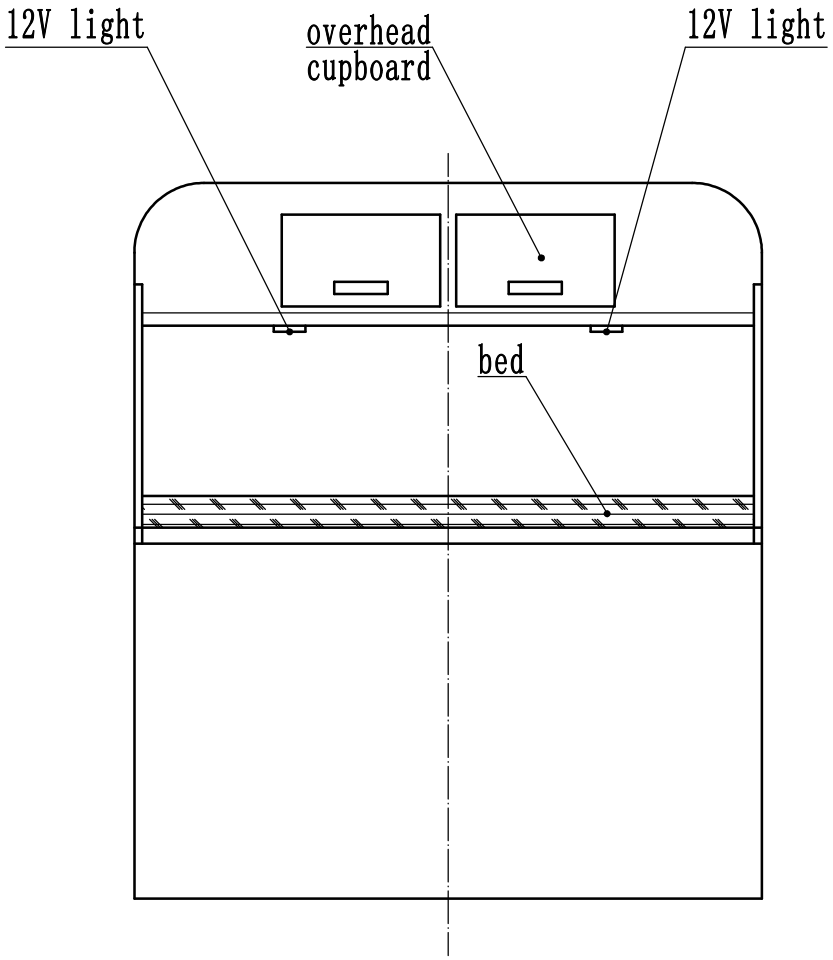
12V light
overhead
cupboard
12V light
bed