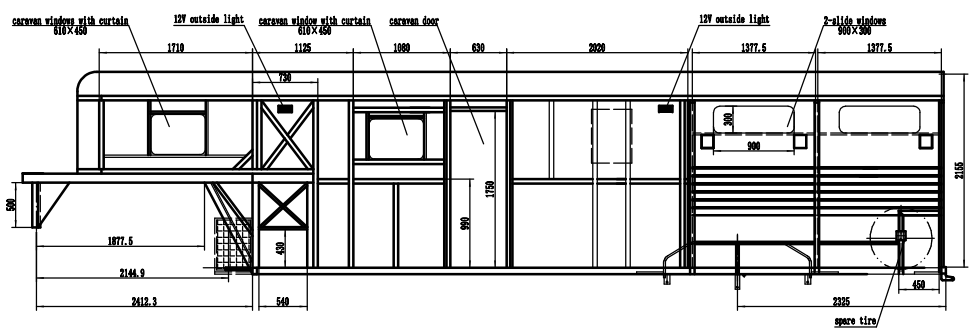

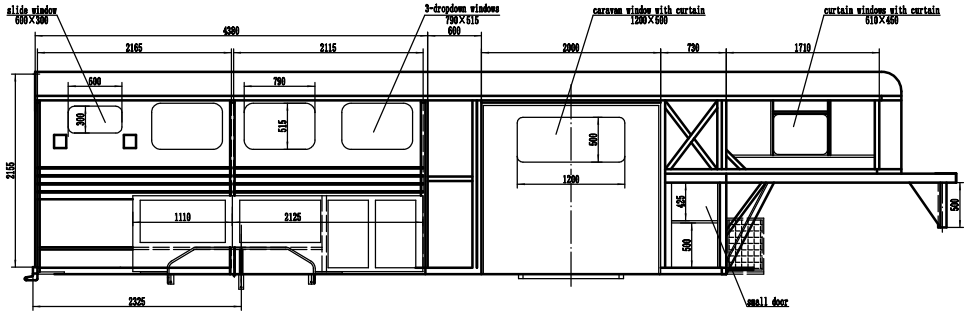

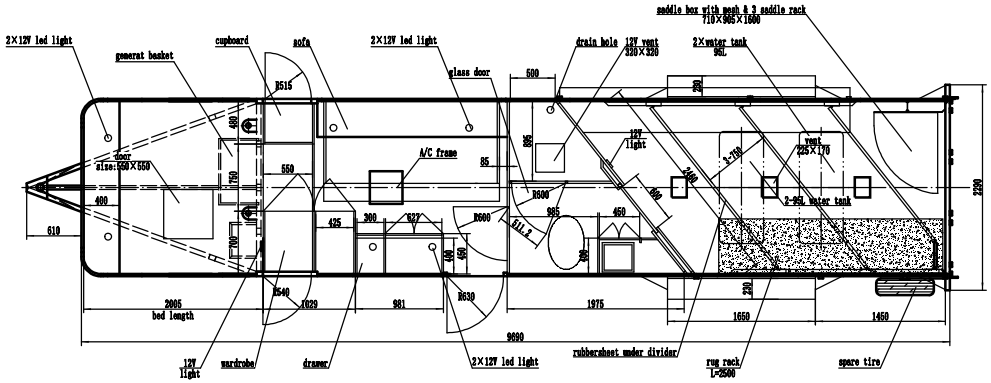

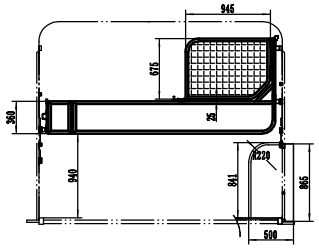

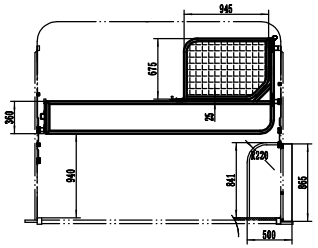

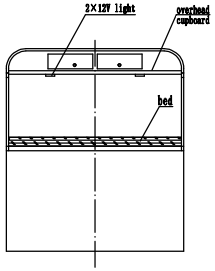

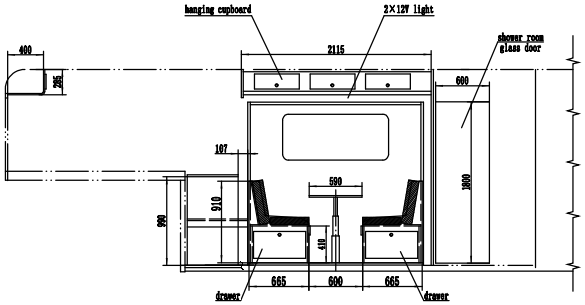

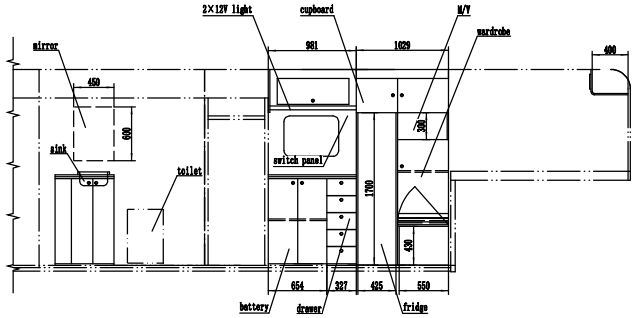

标记	处数	更改文件号	签字	日期	LAYOUT	HORSSEN TRAILER			
设计		审定				JHT.3HAL-GNS.5143			
					Q235A	图样标记	重量	比例	
				日期 2023.10.26				1:20	
						共 张		第 张	

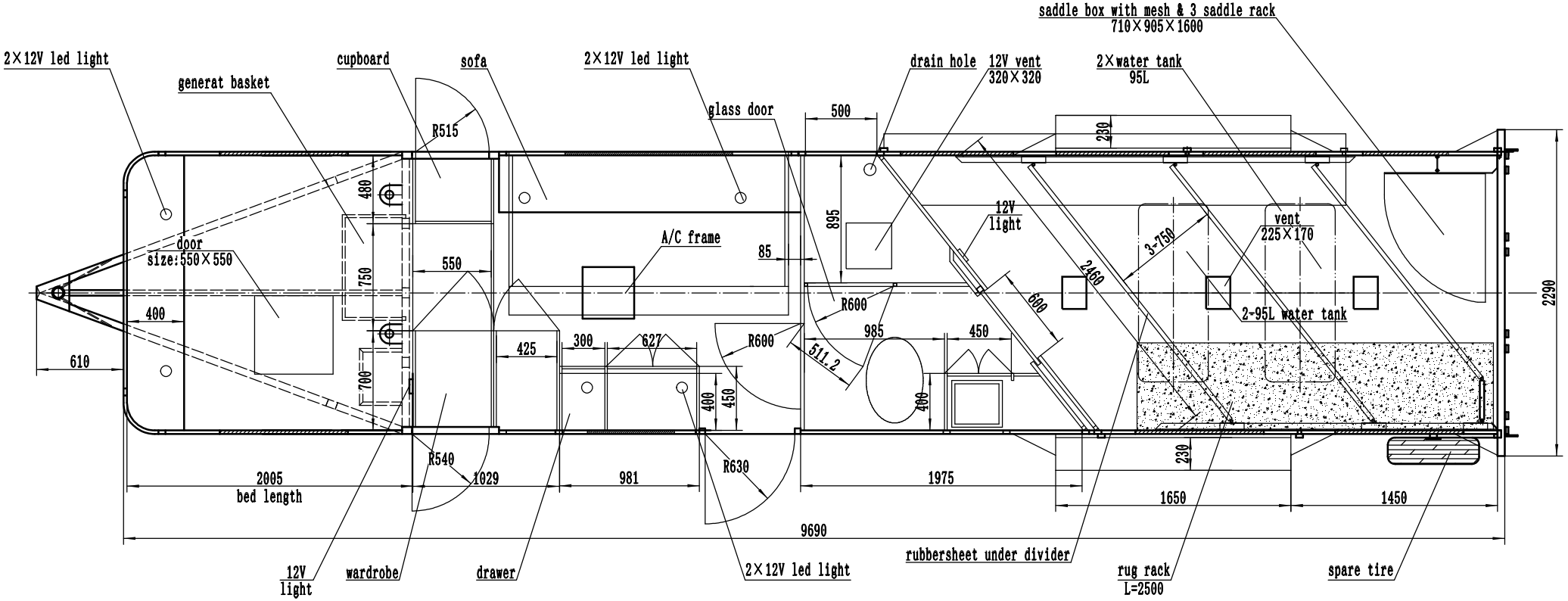
2×12V led light
generat basket
cupboard
sofa
2×12V led light
glass door
drain hole
12V vent
320×320
2×water tank
95L
saddle box with mesh & 3 saddle rack
710×905×1600
R515
500
230
400
895
12V
light
vent
225×170
door
size:550×550
750
550
A/C frame
85
3-750
2460
600
2-95L water tank
2290
400
610
R600
985
450
300
627
R600
511.2
425
700
400
450
400
230
R540
1029
981
R630
1975
2005
bed length
1650
1450
9690
12V
light
wardrobe
drawer
2×12V led light
rubbersheet under divider
rug rack
L=2500
spare tire

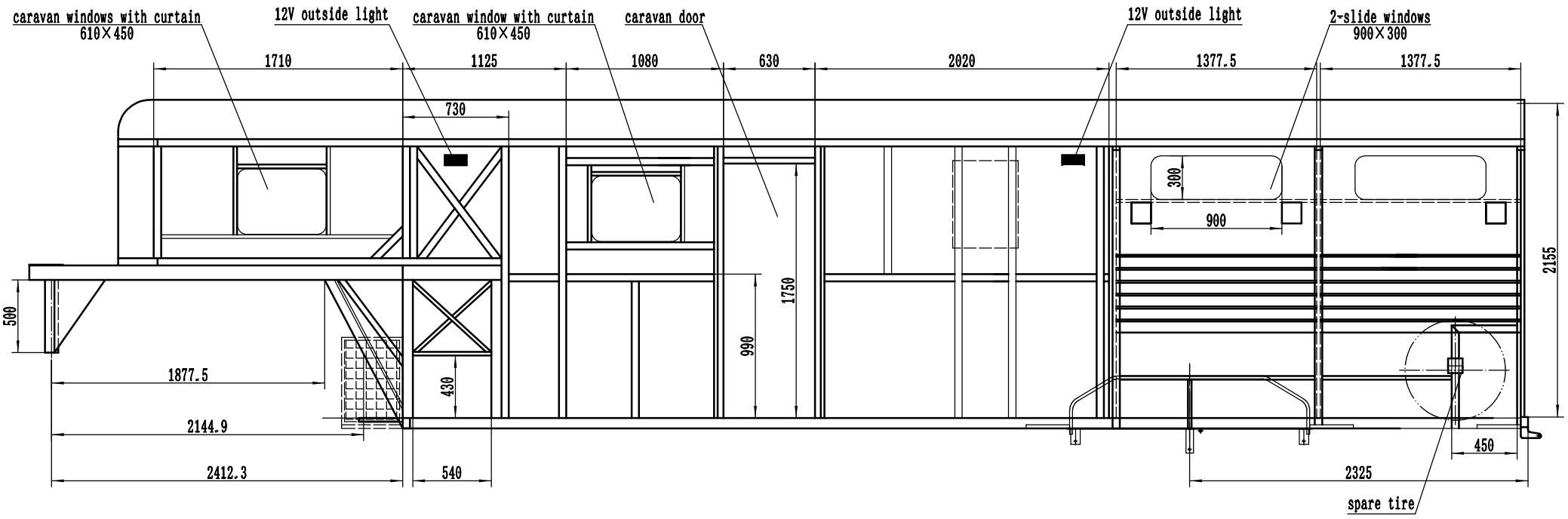
caravan windows with curtain
610×450
12V outside light
caravan window with curtain
610×450
caravan door
12V outside light
2-slide windows
900×300
1710
1125
1080
630
2020
1377.5
1377.5
730
300
900
2155
1750
990
500
1877.5
430
2144.9
2412.3
540
450
2325
spare tire

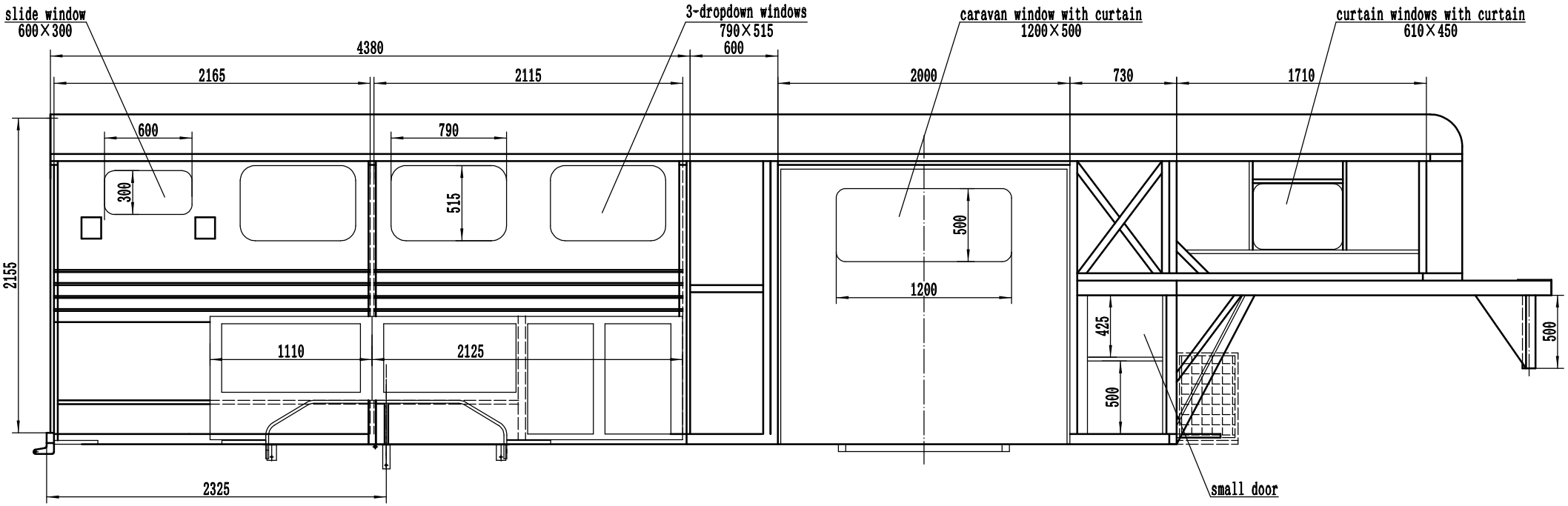
slide window
600×300
3-dropdown windows
790×515
caravan window with curtain
1200×500
curtain windows with curtain
610×450
4380
600
2165
2115
2000
730
1710
600
790
300
515
500
2155
1200
425
500
500
1110
2125
2325
small door

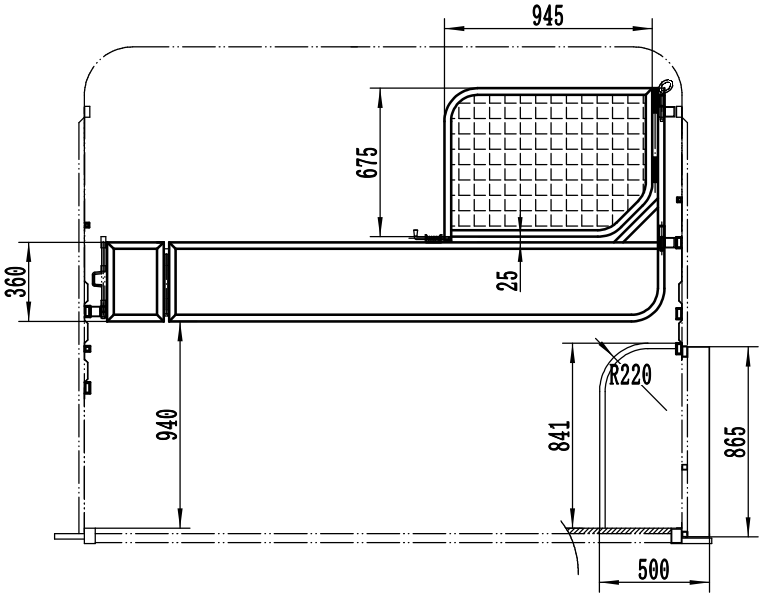
945
675
360
25
940
841
R220
865
500

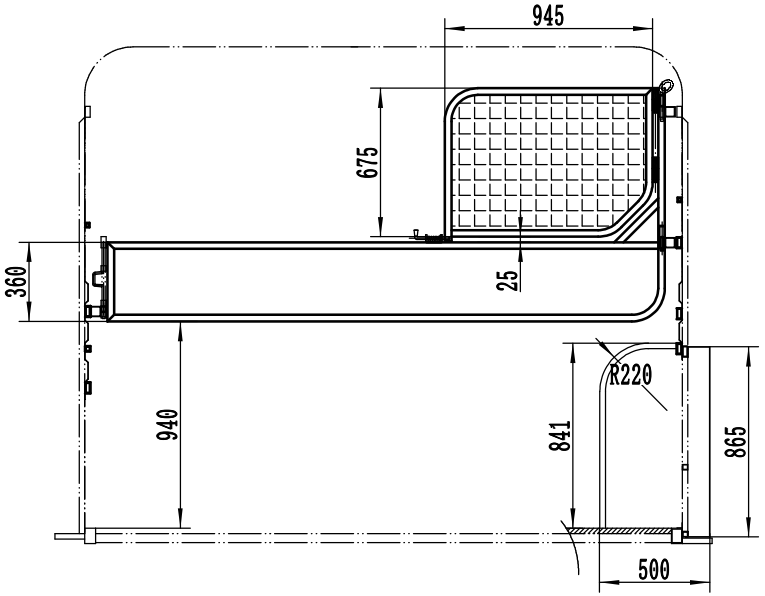
945
675
360
25
940
841
R220
865
500

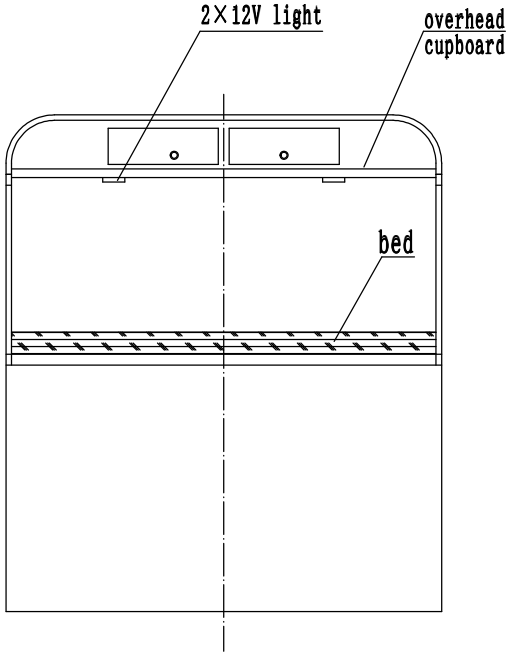
2×12V light
overhead
cupboard
bed

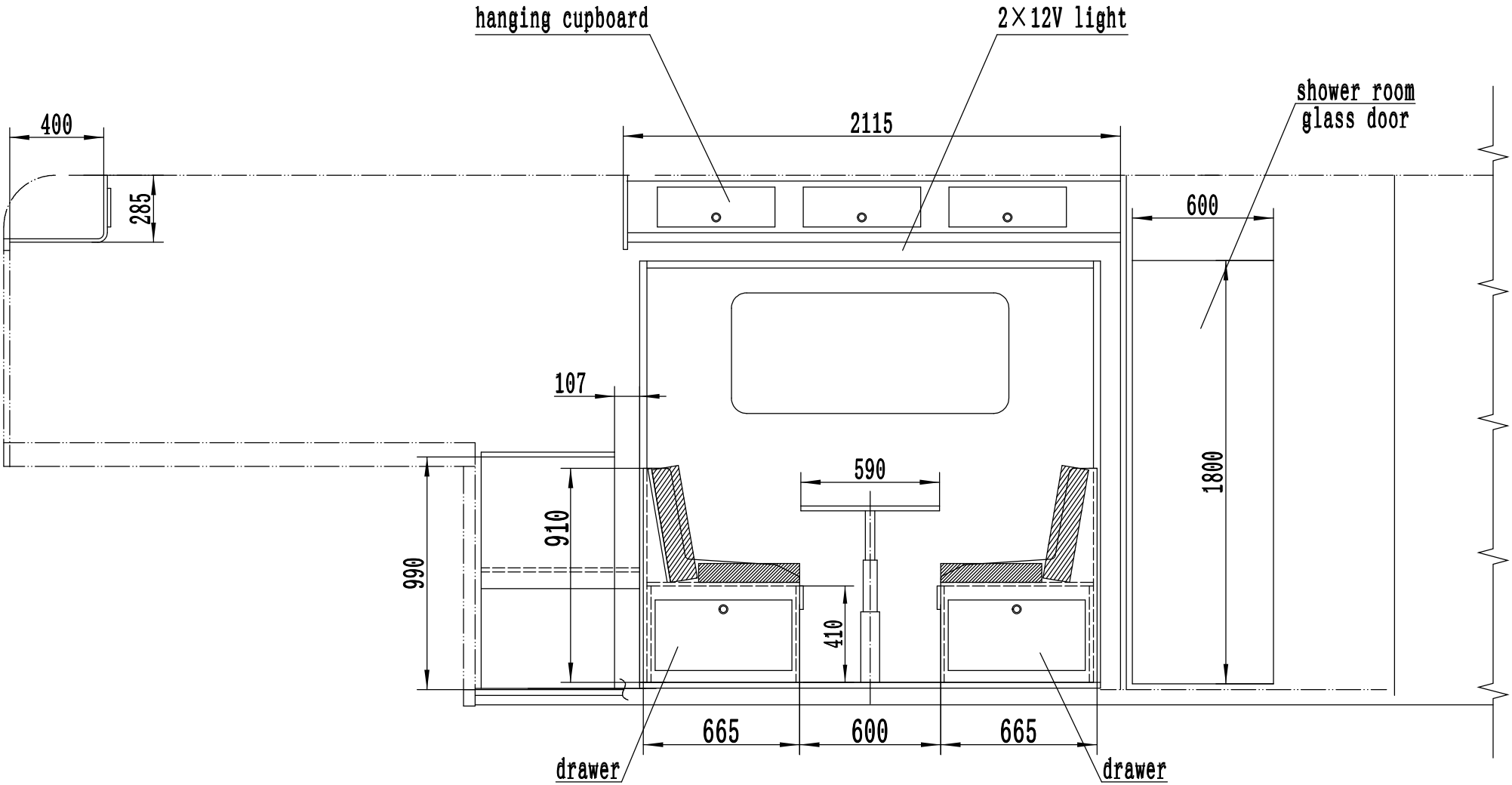
hanging cupboard
2×12V light
shower room
glass door
400
2115
285
600
107
590
1800
910
990
410
665
600
665
drawer
drawer

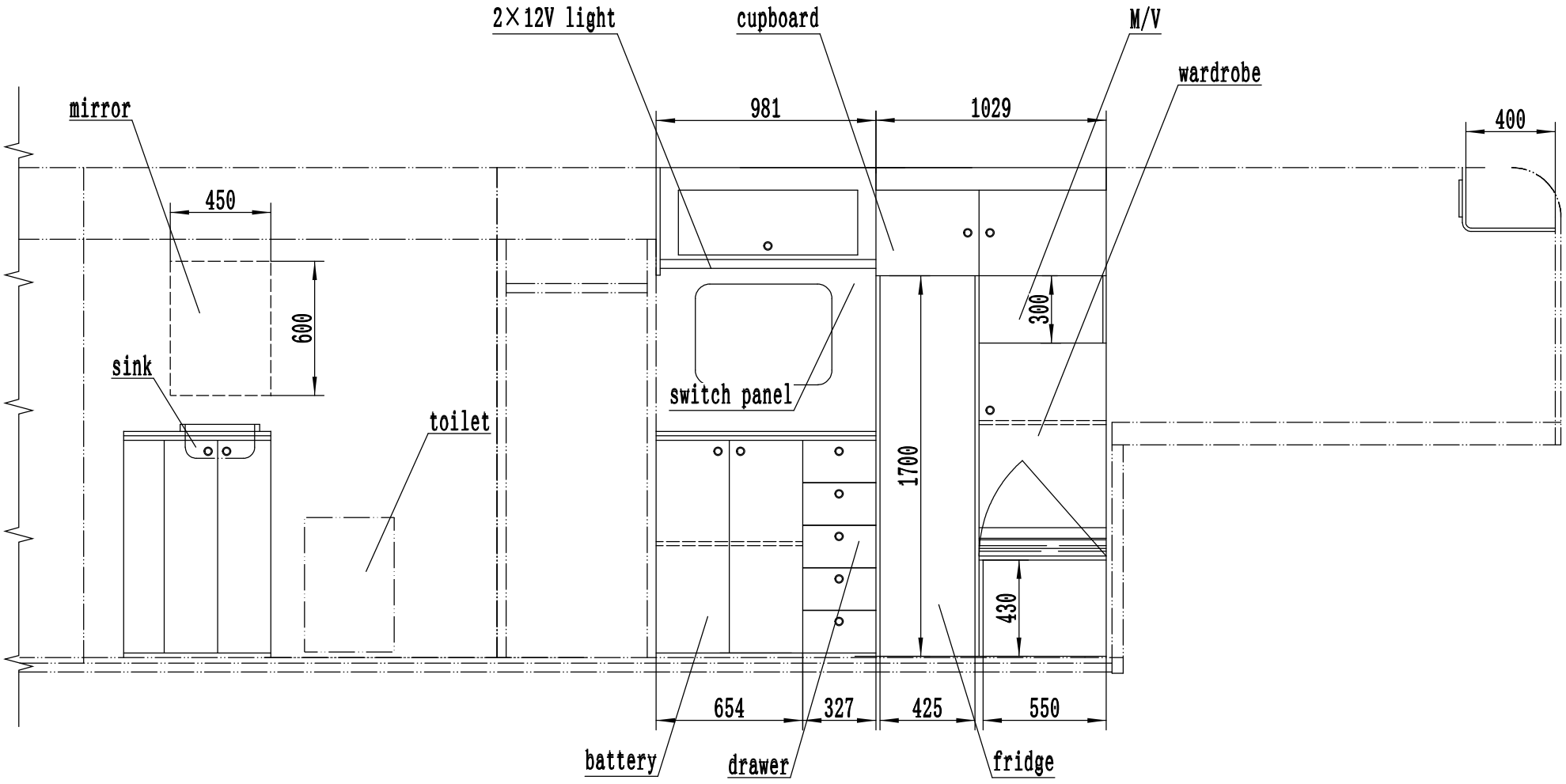
2×12V light
cupboard
M/V
wardrobe
mirror
981
1029
400
450
600
300
sink
switch panel
toilet
1700
430
654
327
425
550
battery
drawer
fridge